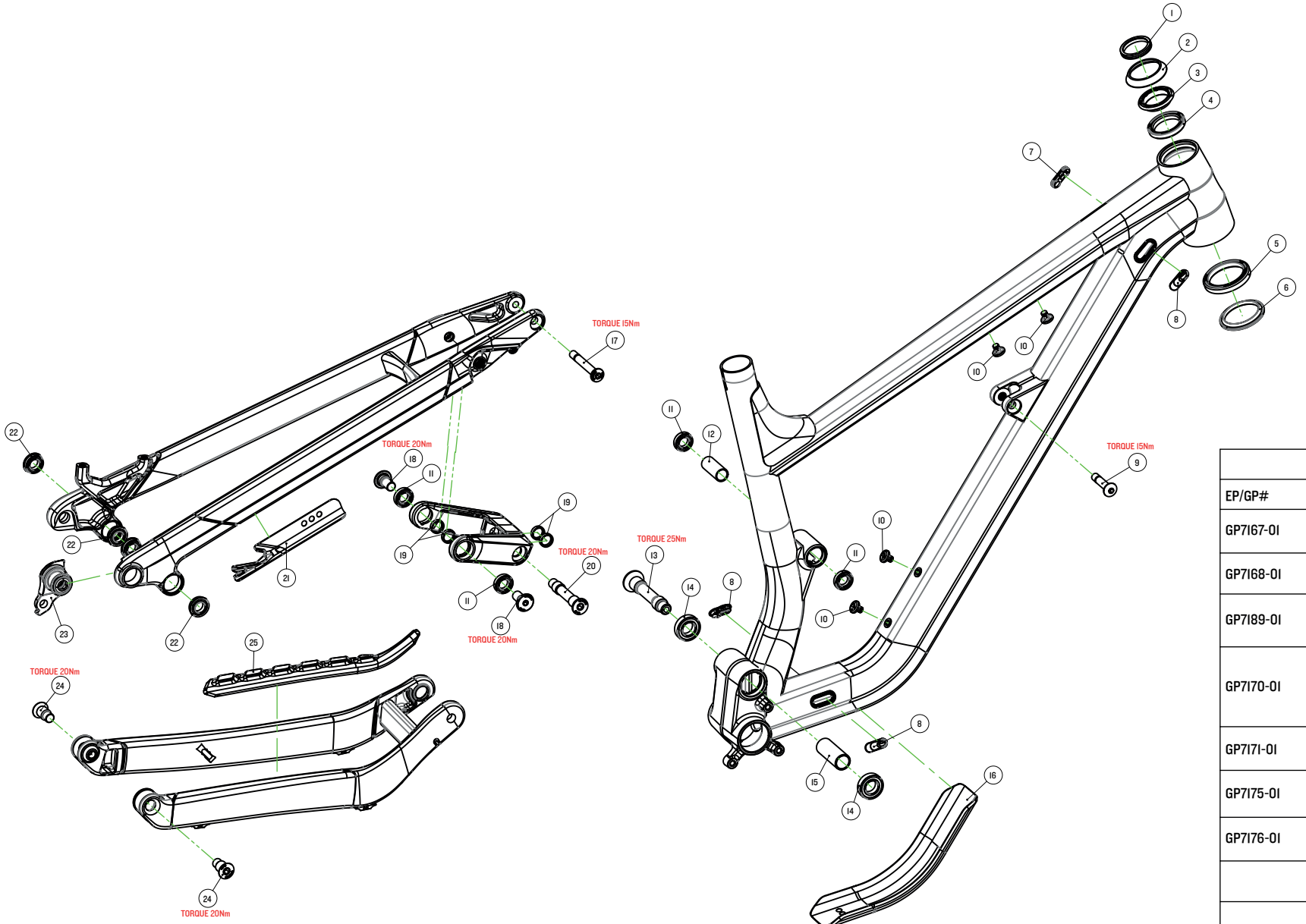

After market products			
EP/GP#	POS.NR.	QTY.	CANYON#
GP7I67-0I	I3 (EPI503-0I), 24 (EPI504-0I)	Ix 2x	I0008039
GP7I68-0I	9 (EP0742-0I), I7 (EPI502-0I)	Ix Ix	I0008040
GP7I89-0I	I8 (EPI500-0I), I9 (EPI505-0I), 20 (EPI506-0I	2x 4x Ix	I0008570
GP7I70-0I	II, I2 (EPI497-0I), I4, I5 (EPI498-0I), 22	4x Ix 2x Ix 4x	I000804I
GP7I7I-0I	2I (EPI523-0I), 25 (EPI48I-0I)	Ix Ix	I0008042
GP7I75-0I	I6 (EPI482-0I)	Ix	I000809I
GP7I76-0I	I6 (EPI483-0I)	Ix	I0008092
	23	Ix	I0006305
GP7I73-0I	4, 5, 6	Ix Ix Ix	I0007997

TORQUE AL | MII3-0I

REVISION 00 | 28.10.2021

THIS TECHNICAL DOCUMENT, INCLUDING ANY PICTURES AND VIDEOS PROVIDED, IS COPYRIGHT-PROTECTED AND INTENDED SOLELY FOR USE IN YOUR OPERATION BY DULY AUTHORIZED PERSONNEL