# PRIME THUNDERFLASH

QUINTESSENCE OF ENDURO ■ EXPLODED VIEW ■ 29" | 165 MM

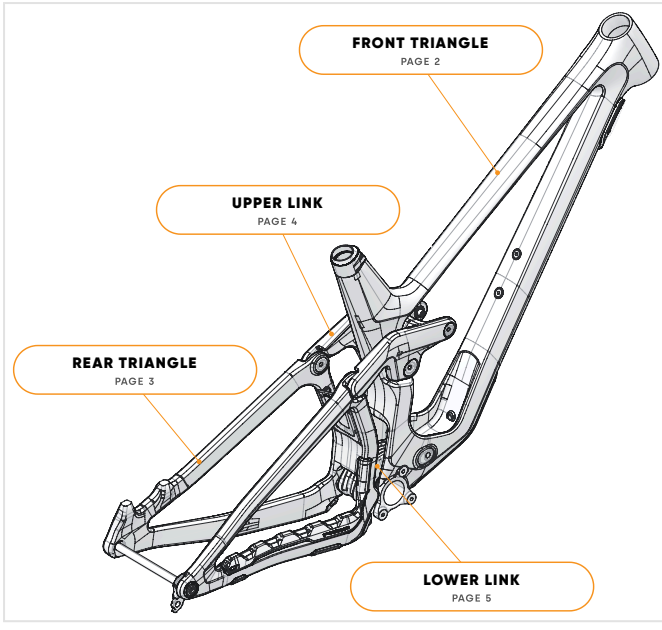



| VIEW | PAGE |
|---|---|
| FRONT TRIANGLE | PAGE 2 |
| REAR TRIANGLE | PAGE 3 |
| UPPER LINK | PAGE 4 |
| LOWER LINK | PAGE 5 |


## FRAME SPEC

WHEEL SIZE
**29"**

FRAME
**FULL CARBON FIBER: FRONT TRIANGLE, REAR TRIANGLE, UPPER LINK, LOWER LINK**

TECHNOLOGY
**VIP COMPOSITES | S.H.R.E.D DYNAMICS**

FRONT TRAVEL
**170 MM**

REAR TRAVEL
**165 MM**

RECOMMENDED SAG
**30%**

SHOCK TYPE
**TRUNNION**

SHOCK LENGTH
**205 MM**

SHOCK STROKE
**65 MM**

SHOCK BUSHING SIZE
**30 × 10 MM**

BOTTOM BRACKET
**BSA 73 MM**

SEATPOST
**31.6 MM**

REAR AXLE
**12 × 148 MM BOOST**

DERAILLEUR HANGER
**SRAM UDH**

HEADSET
**ACROS PRIME ENDURO ZS44 / ZS56 BLOCK LOCK**

MAX CHAINRING SIZE
**34T**

REAR BRAKE MOUNT
**180 MM PM OR 200 MM WITH 20 MM PM ADAPTER**

MAX ROTOR SIZE
**200 MM**

MAX TIRE CLEARANCE
**2.5" – MAY VARY ACCORDING TO TIRE AND RIM MODEL**

# FRONT TRIANGLE

THUNDERFLASH ■ EXPLODED VIEW ■ 29" | 165 MM

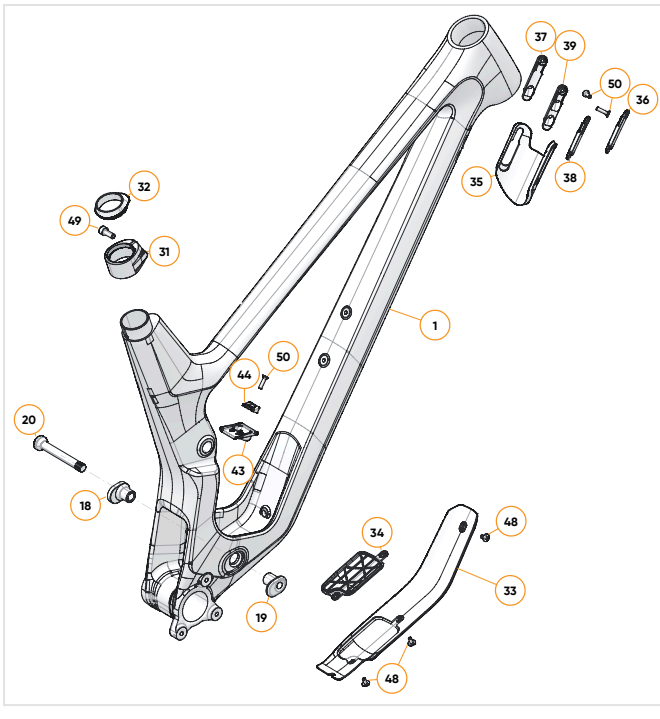


Pinch to zoom the drawing.

## PARTS 18 ITEMS

**1 FRONT TRIANGLE**
Qty **1** PN **GR04-000**

**18 FRONT TRIANGLE - LOWER LINK LEFT BUSHING**
Qty **1** PN **GR04-007**

**19 FRONT TRIANGLE - LOWER LINK RIGHT BUSHING**
Qty **1** PN **GR04-006**
■ Loctite 243 to threads

**20 FRONT TRIANGLE - LOWER LINK - SHOCK AXLE**
**20 Nm** Qty **1** PN **GR04-008**
■ Grease to shaft

**31 SEAT CLAMP - 31.6 MM SEATPOST**
Qty **1** PN **GR04-013**

**32 SEAT CLAMP RUBBER CAP - 31.6 MM SEATPOST**
Qty **1** PN **GR04-040**

**33 FRONT TRIANGLE - DOWNTUBE PROTECTOR**
Qty **1** PN **GR04-053**

**34 FRONT TRIANGLE - DOWNTUBE PROTECTOR COVER**
Qty **1** PN **GR04-058**

**35 FRONT TRIANGLE - FORK BUMPER**
Qty **1** PN **GR04-055**

**36 CABLE INLET - BLIND**
Qty **1** PN **GR04-059**

**37 CABLE INLET - SINGLE HOLE BACK**
Qty **1** PN **GR04-060**

**38 CABLE INLET - SINGLE HOLE FRONT**
Qty **1** PN **GR04-061**

**39 CABLE INLET - DOUBLE HOLE**
Qty **1** PN **GR04-062**

**43 FRONT TRIANGLE - CABLE OUTLET (RUBBER)**
Qty **1** PN **GR04-070**

**44 FRONT TRIANGLE - CABLE HOLDER (ALLOY)**
Qty **1** PN **GR04-069**

**48 BOLT M4×12 ISO 7380-2 (PROTECTORS, FENDER)**
**2 Nm** Qty **3** PN **M4×12 ISO 7380-2**
■ Loctite 222 to threads

**49 BOLT M6×14 DIN 912 TI (SEAT CLAMP)**
**8–10 Nm** Qty **1** PN **M6×14 DIN 912 TI**
■ Grease to threads

**50 BOLT M4×16 DIN 7991 (FT CABLE HOLDER, GROMMETS)**
**1 Nm** Qty **3** PN **M4×16 DIN 7991**
■ Loctite 222 to threads

# REAR TRIANGLE

THUNDERFLASH ■ EXPLODED VIEW ■ 29" | 165 MM

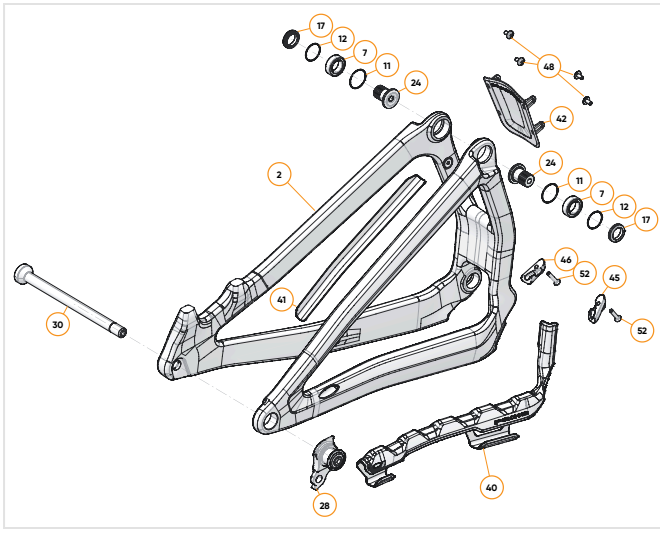


Pinch to zoom the drawing.

## PARTS — 15 ITEMS

**2 — REAR TRIANGLE**
Qty **1** | PN **GR04-001**

**7 — BEARING 24×15×7**
Qty **2** | PN **63802-2RS**
- Grease to outer surface

**11 — O-RING 22×1 MM**
Qty **2** | PN **OR 22×1**
- Grease – thin film only

**12 — O-RING 20×1 MM**
Qty **2** | PN **OR 20×1**
- Grease – thin film only

**17 — WASHER OD19 ID10 T4.5 (W/ O-RING)**
Qty **2** | PN **GR04-009**
- Grease to inner surface

**24 — REAR TRIANGLE - UPPER LINK BOLT**
**20 Nm** | Qty **2** | PN **GR03-013**
- Loctite 243 to threads, grease to shaft

**28 — DERAILLEUR HANGER - SRAM UDH**
Qty **1** | PN **SRAM 00.7918.089.000**
- Torque per SRAM UDH specification

**30 — WHEEL THRU AXLE**
**12–15 Nm** | Qty **1** | PN **GR04-037**
- Grease to shaft and threads

**40 — REAR TRIANGLE - CHAINSTAY PROTECTOR**
Qty **1** | PN **GR04-041**

**41 — REAR TRIANGLE - SEATSTAY PROTECTOR**
Qty **1** | PN **GR04-042**

**42 — REAR TRIANGLE - FENDER**
Qty **1** | PN **GR04-056**

**45 — REAR TRIANGLE - RIGHT CABLE INLET**
Qty **1** | PN **MSBR-130**

**46 — REAR TRIANGLE - LEFT CABLE INLET**
Qty **1** | PN **MSBR-131**

**48 — BOLT M4×12 ISO 7380-2 (PROTECTORS, FENDER)**
**2 Nm** | Qty **4** | PN **M4×12 ISO 7380-2**
- Loctite 222 to threads

**52 — BOLT M4×20 DIN 7991 (RT CABLE INLETS)**
**2 Nm** | Qty **2** | PN **M4×20 DIN 7991**
- Loctite 222 to threads

# UPPER LINK

THUNDERFLASH ■ EXPLODED VIEW ■ 29" | 165 MM

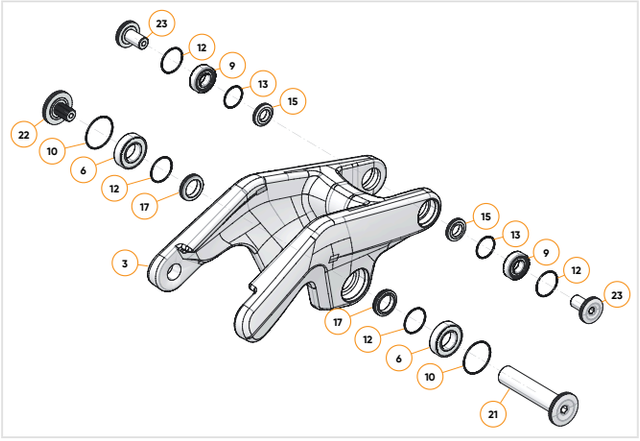


Pinch to zoom the drawing.

| PARTS | 11 ITEMS |
|---|---|

**3 UPPER LINK**

Qty **1** PN **GR04-002-29**

**6 BEARING 28×15×7**

Qty **2** PN **61902-2RS**

■ Grease to outer surface

**9 BEARING 22×10×6**

Qty **2** PN **61900-2RS**

■ Grease to outer surface

**10 O-RING 26×1 MM**

Qty **2** PN **OR 26×1**

■ Grease – thin film only

**12 O-RING 20×1 MM**

Qty **4** PN **OR 20×1**

■ Grease – thin film only

**13 O-RING 17×1 MM**

Qty **2** PN **OR 17×1**

■ Grease – thin film only

**15 WASHER OD19 ID10 T4 (W/ O-RING)**

Qty **2** PN **GR04-027**

■ Grease to inner surface

**17 WASHER OD19 ID10 T4.5 (W/ O-RING)**

Qty **2** PN **GR04-009**

■ Grease to inner surface

**21 UPPER LINK - FRONT TRIANGLE AXLE**

Qty **1** PN **GR04-035**

■ Grease to shaft

**22 UPPER LINK - FRONT TRIANGLE BOLT**

**15 Nm** Qty **1** PN **GR03-018**

■ Loctite 243 to threads

**23 UPPER LINK - SHOCK BOLT**

**12 Nm** Qty **2** PN **GR04-026**

■ Loctite 243 to threads, grease to shaft

# LOWER LINK

THUNDERFLASH ■ EXPLODED VIEW ■ 29" | 165 MM

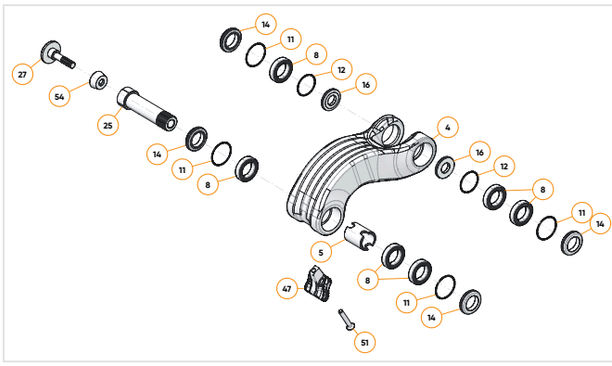


Pinch to zoom the drawing.

| PARTS | 12 ITEMS |
|---|---|

**4 LOWER LINK**

Qty **1** PN **GR04-004**

**5 LOWER LINK - REAR TRIANGLE BUSHING**

Qty **1** PN **GR04-050**

■ Grease to inner surface

**8 BEARING 24×15×5**

Qty **6** PN **61802-2RS**

■ Grease to outer surface

**11 O-RING 22×1 MM**

Qty **4** PN **OR 22×1**

■ Grease – thin film only

**12 O-RING 20×1 MM**

Qty **2** PN **OR 20×1**

■ Grease – thin film only

**14 WASHER OD24 ID15 T5 (W/ O-RING)**

Qty **4** PN **GR04-005**

■ Grease to inner surface

**16 WASHER OD22 ID10 T3 (W/ O-RING)**

Qty **2** PN **GR04-016**

■ Grease to inner surface

**25 REAR TRIANGLE - LOWER LINK AXLE**

**20 Nm** Qty **1** PN **GR04-038**

■ Loctite 243 to threads only, grease to shaft only

**27 REAR TRIANGLE - LOWER LINK AXLE BOLT**

**5 Nm** Qty **1** PN **GR03-022**

■ Loctite 222 to threads, grease to shaft

**47 LOWER LINK - CABLE HOLDER**

Qty **1** PN **GR04-067-1**

**51 BOLT M4×25 DIN 7991 (LOWER LINK CABLE HOLDER)**

**2 Nm** Qty **1** PN **M4×25 DIN 7991**

■ Loctite 222 to threads

**54 REAR TRIANGLE - LOWER LINK AXLE CONE**

Qty **1** PN **GR00-04-007**

■ Grease to surface